The Mighty MAGNA 32-100

– The Quiet Revolution just got smaller

The new smaller MAGNA variable-speed wet rotor circulator from Grundfos is powerful, reliable, intelligent, and energy-efficient. MAGNA delivers plenty of edge by utilizing a permanent-magnet rotor – a revolutionary design pioneered by Grundfos. It's easy to install, simple to operate, and an excellent choice for replacement applications. With these features and more, MAGNA is the smart choice for optimized pump efficiency.

Features & Benefits:

- Permanent magnet motor design – reduces power consumption by 50% or more
- Integrated frequency converter ensures maximum efficiency during operation
- Patented AUTO*ADAPT*™ function controls pump performance automatically
- Low noise level
- Flows from 0 to 52 gpm
- Plug-and-pump = simple to install

Technical Data:

Flow Range:	0 to 52 GPM
Head Range:	0 to 34 Feet
Motor:	1X230V
Min. Fluid Temperature:	35°F (2°C)
Max. Fluid Temperature:	200°F (95°C)
Max. Working Pressure:	145 PSI
Watts:	10-180W
Max. Amps:	1.23A

Performance Curve:

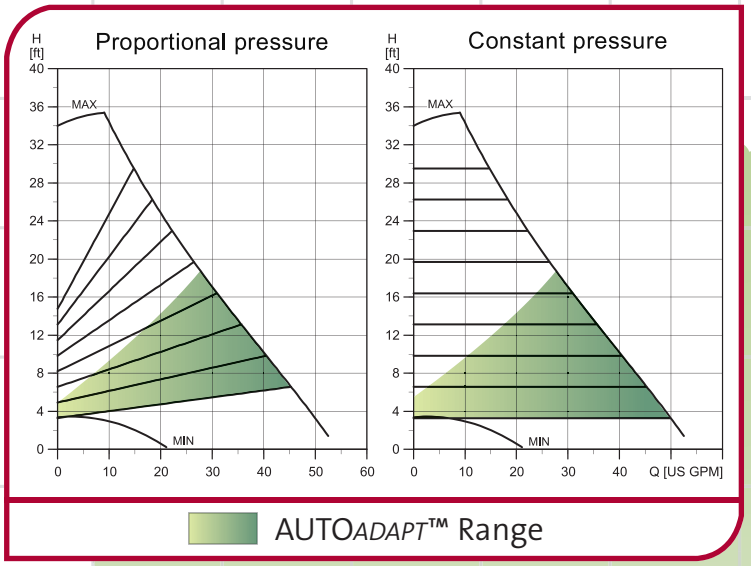

Product Offering:

Model	Description	Part Number
MAGNA 32-100	Cast iron flange with line cord	97751849
Geni Module	External Control/Bus Communicaton for MAGNA 32-100	96236335
Relay Module	Signal Relay for MAGNA 32-100	96236336

Dimensional Drawing:

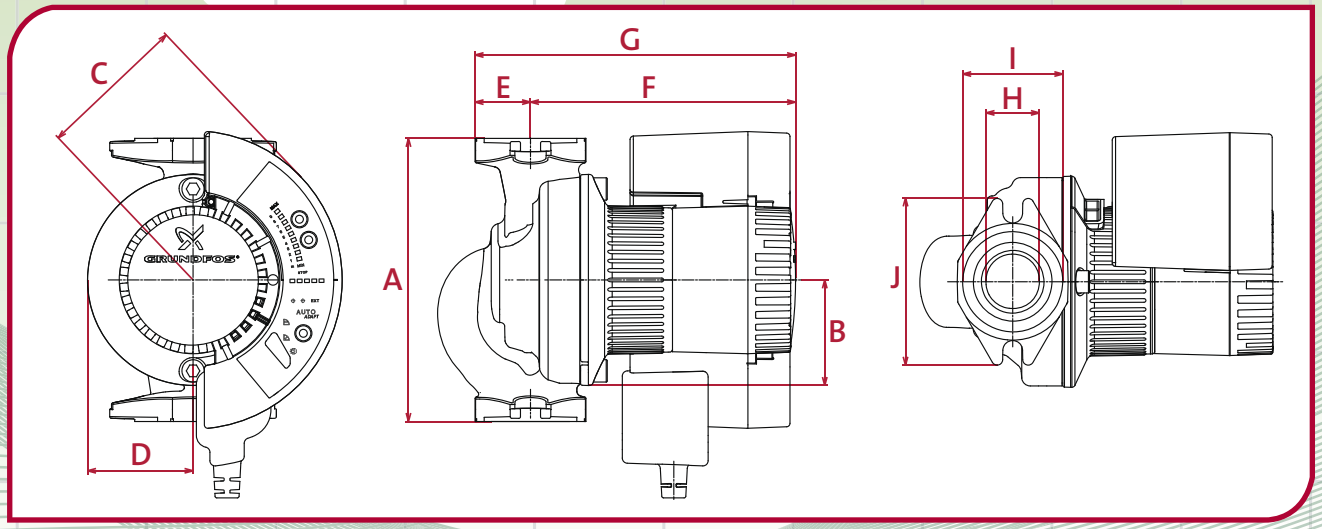

A	B	C	D	E	F	G	H	I	J
6-1/2	2-3/8	3-3/8	2-3/8	1-1/4	6-1/8	7-3/8	1-1/4	2-1/4	3-7/8

L-MAG-SL-02 1/11 (US)

U.S.A.
GRUNDFOS Pumps Corporation
17100 West 118th Terrace
Olathe, Kansas 66061
Phone: (913) 227-3400
Telefax: (913) 227-3500

Canada
GRUNDFOS Canada Inc.
2941 Brighton Road
Oakville, Ontario
L6H 6C9
Phone: (905) 829-9533
Telefax: (905) 829-9512

Mexico
Bombas GRUNDFOS de Mexico S.A. de C.V.
Boulevard TLC No. 15
Parque Industrial Stiva Aeropuerto
C.P. 66600 Apodaca, N.L. Mexico
Phone: 011-52-81-8144 4000
Telefax: 011-52-81-8144 4010

www.grundfos.com

U.S. GREEN BUILDING COUNCIL MEMBER

GRUNDFOS®